FireDos®

DATA SHEET PROPORTIONER FD15000 GEN III

FOR STATIONARY EXTINGUISHING SYSTEMS

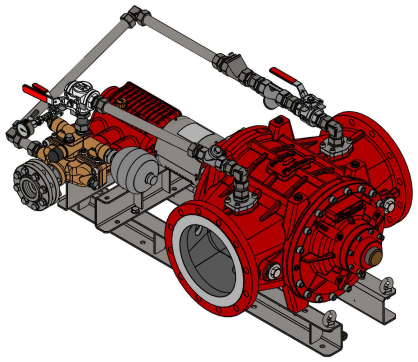

1. TECHNICAL DATA

Type	FD15000/1-S	FD15000/3-S
Proportioning rate	**1 %**	**3 %**
Approvals	FM Approval PR452158	
Flow directions of water motor	Horizontal: "left → right" or "right → left"	
	Vertical: "top → bottom" or "bottom → top"	
Min. water flow rate [1]	600 l/min	800 l/min
Water flow rate [2] FM APPROVED	1060 l/min – 15000 l/min	1260 l/min – 15000 l/min
Operating temperature [3]	5 °C – 50 °C (standard version)	
	5 °C – 80 °C (High-Temp version) [x]	
Storage temperature	-20 °C – 80 °C	
Operating pressure	5 – 16 bar	
Weight [4] **Freshwater version** **Seawater version** [x]	 385 kg 765 kg	 575 kg 955 kg
ATEX classification [x] **for +5 °C ≤ T_a ≤ +60 °C**	Ⓔx II 2G Ex h IIC T4 Gb Ⓔx II 2D Ex h IIIC T130 °C Gb	

1) The nominal proportioning rate is achieved when reaching the specified minimum figure. Indication for proportioning of fluid Newtonian foam agents at operating pressure of 5 bar. For more detailed information, refer to page 2, item 3. "*Minimum water flow rate*".
2) For information regarding FM Approved data, please refer to www.approvalguide.com.
3) Operating temp. is the max. ambient and medium (foam and extinguishing water) temperature. Max. foam agent temp. is generally limited to 50 °C.
4) Weight indications are based upon the standard version in dry condition. Special versions will differ.
X) Optional equipment.

CE FM APPROVED Ex

www.firedos.com

2. PRESSURE LOSS

Indication valid for operating pressure of 10 bar. For more information on different system conditions, please contact us.

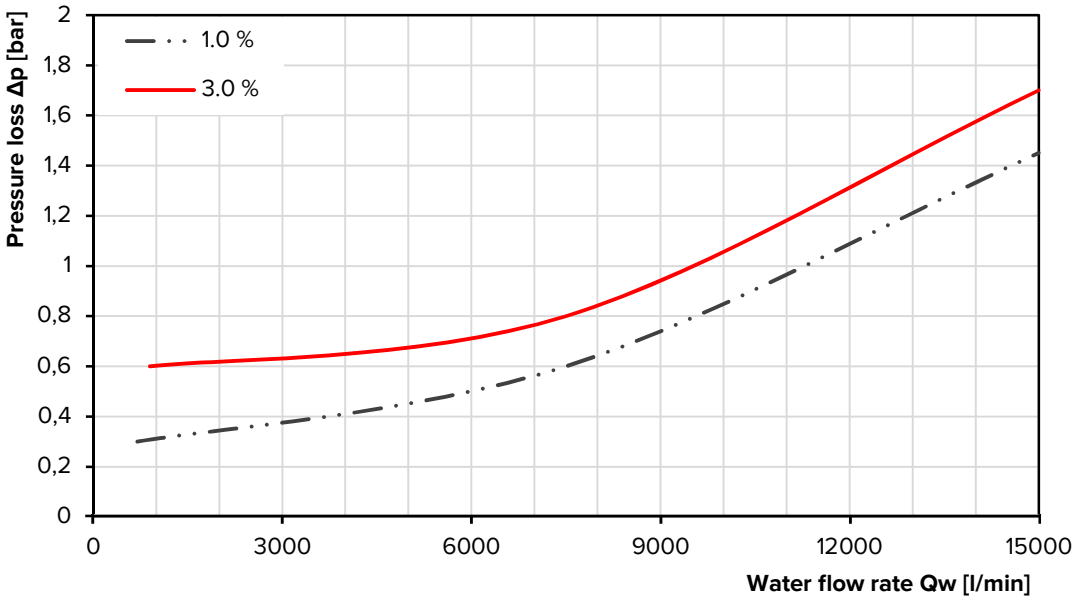

3. MINIMUM WATER FLOW RATE

The following diagrams show the effect of the operating pressure and foam agent viscosity on the minimum water flow rate.

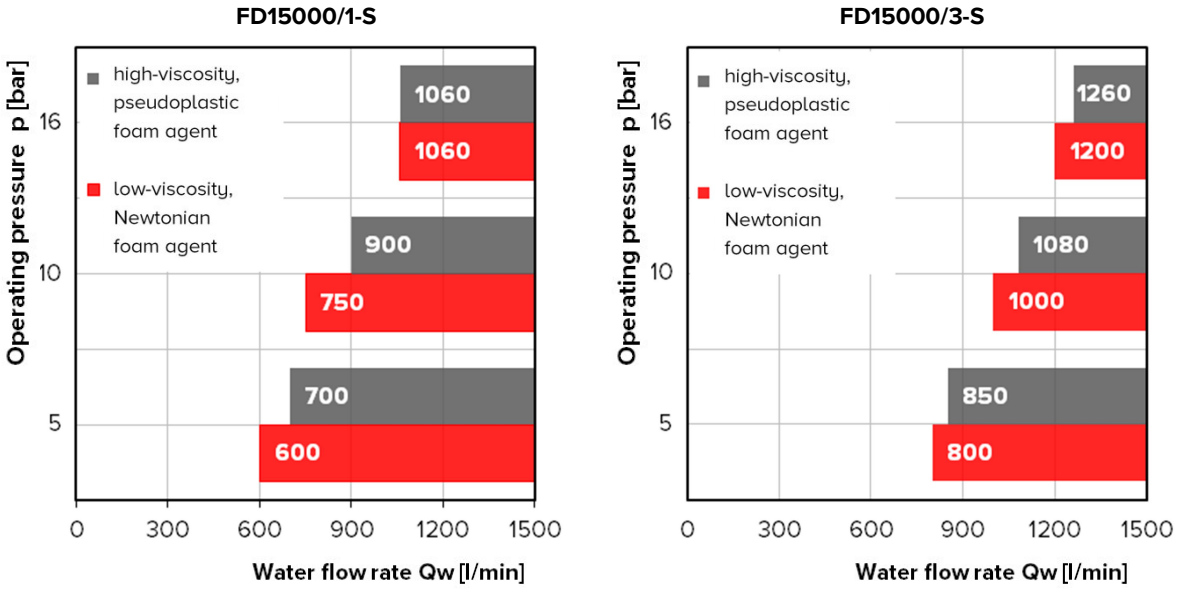

Comment: The values specified for the minimum extinguishing water flow rate increase by approx. 40% in the high-temperature version. The specified figures apply to the foam agent viscosity range stated in paragraph 4 only.

4. FOAM AGENT VISCOSITY

FireDos proportioners are suitable for all foam agents available on the market. For reference regarding units with an FM Approval, please find the corresponding/associated range of dynamic viscosity below (www.approvalguide.com). Contact us if the dynamic viscosity of your foam agent is higher than the values in the diagram. **Do not hesitate to request our support for the correct dimensioning of your suction line.**

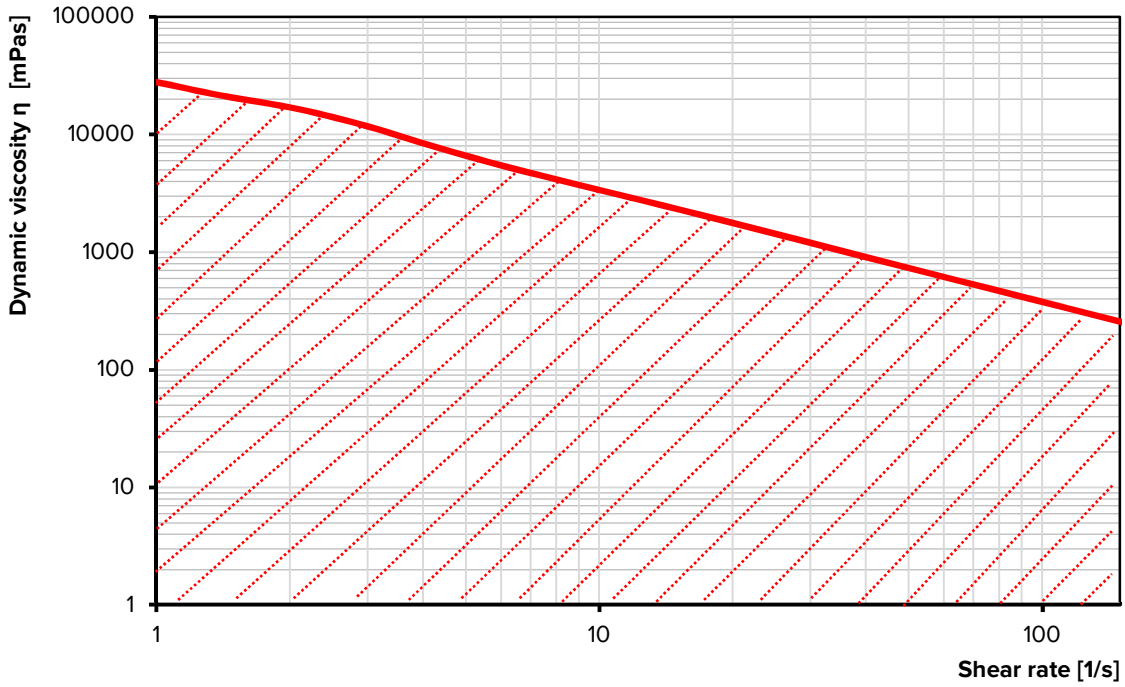

5. MATERIALS

	Freshwater version	Seawater version
Water motor [4)]	Cast Aluminium G-AlSi7Mg HC-coated, AlMgSi1 HC-PTFE-coated, stainless steel 316 / 316Ti, POM, PVDF, NBR, FKM	Cast Bronze G-CuSn10, stainless steel 316 / 316Ti, Aluminium-Bronze CuAl10Fe5Ni5-C-GC, POM, PVDF, NBR, FKM
Proportioning pump [4)]	Stainless steel 316 / SS316Ti, POM, FKM, Aluminium oxide ceramic Al2O3, Aluminium-Bronze CuAl10Ni5Fe5-C-GC	
Pipework [4)]	Stainless steel 316 / CF8M / SS316Ti, PTFE,	
Support frame	Stainless steel 304 / 316	

4) media-exposed materials

6. FLOW DIAGRAM

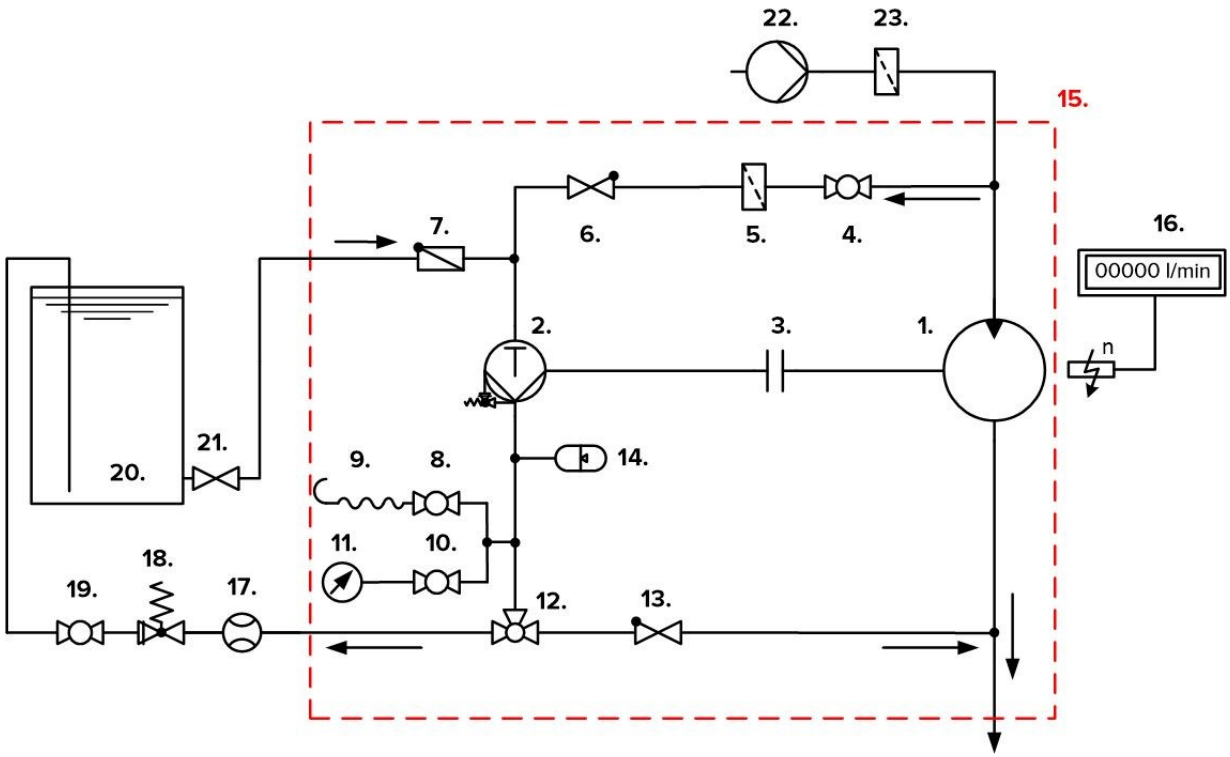

1. Water motor
2. Proportioning pump
3. Coupling
4. 2-way ball valve “Flushing/Priming”
5. Filter in the flushing line
6. Check valve in the flushing line
7. Non-return flap in the suction line
8. Air bleed valve
9. Air bleed hose
10. Shut-off valve pressure gauge
11. Pressure gauge
12. 3-way ball valve “Returning/Proportioning”
13. Check valve in the proportioning line
14. Pulsation damper
15. Standard scope of supply of ***FireDos*** proportioner
16. Revolution counter with flow rate display x)
17. Flow meter for return line x)
18. Pressure retention valve for return line x)
19. 2-way ball valve in return line x)
20. Foam agent supply
21. Shut-off valve in the suction line
22. Extinguishing water supply
23. Water filter

X) Optional equipment

7. EXAMPLE FIGURE / DIMENSIONS

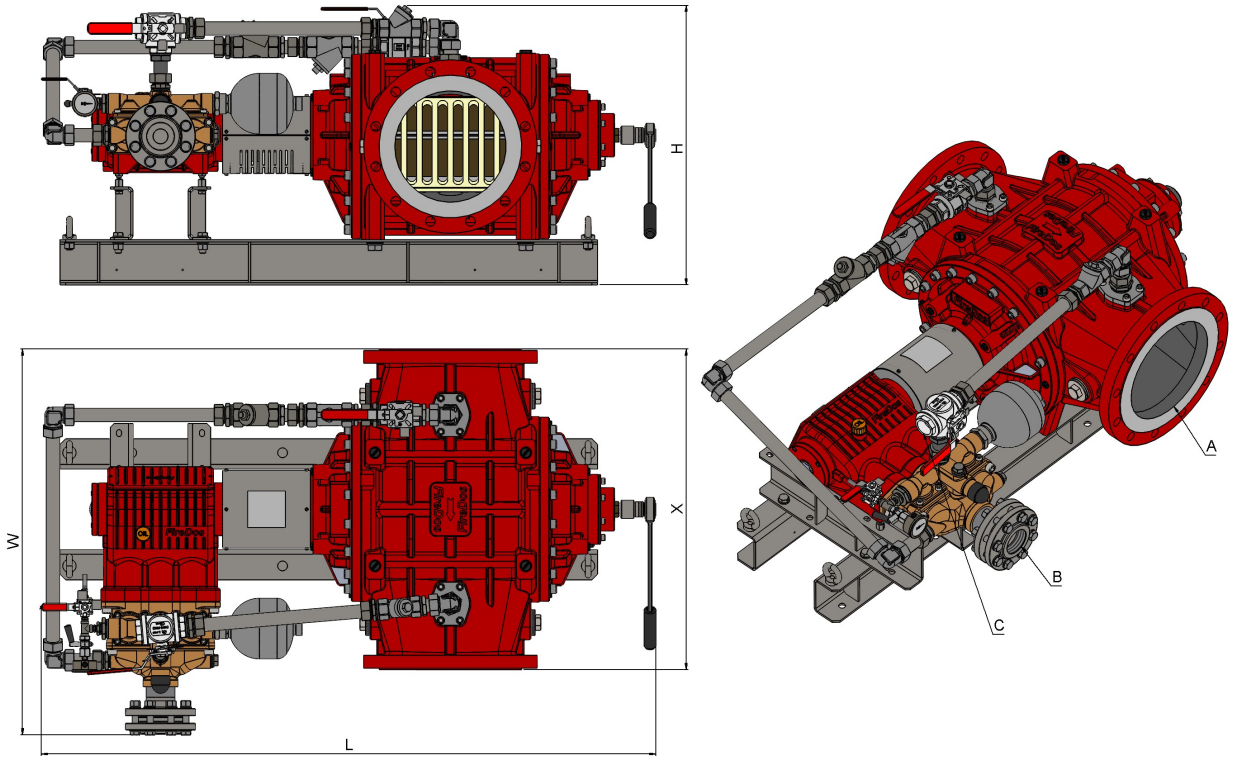

Type	FD15000/1-S	FD15000/3-S
Proportioning rate	**1 %**	**3 %**
Connection water motor A	Optionally: flange DIN EN 1092-1, DN300 PN16 flange ASME B16.5, 12" Class 150	
Installation length water motor X [5)]	850 mm	
Connection suction line B	2.1/2" FT BSP	4" FT BSP
Connection return line C	1.1/2" FT BSP	2.1/2" FT BSP
Length L [5)]	1630 mm	1840 mm
Width W [5)]	1030 mm	1240 mm
Height H [5)]	745 mm	860 mm

All figures are approximate only and depend on the particular version/equipment options.

5) Further accessories to the proportioner may require more installation space
Please allow sufficient accessibility of the proportioner for maintenance work. For assistance to ensure sufficient accessibility, please refer to our planning manual for proportioners.

8. MANUFACTURER

FireDos GmbH, Auf der Kaulbahn 6, 61200 Woelfersheim, Germany
Phone +49 (0) 6036 9796-0, Email: info@firedos.de

We reserve the right to make modifications at any time.